ALL TRAFFIC SOLUTIONS™

PRODUCT SPECIFICATIONS:

WRONG WAY DETECTION AND NOTIFICATION SYSTEM

The ATS Wrong Way Detection and Notification System detects and alerts drivers with a flashing message, warning them that they are travelling the wrong way on a ramp or other one-way lane.

If the driver continues past the flashing message sign, the system confirms the continued travel and alerts the designated authorities to the wrong way vehicle by email or text message.

Initial Detection and Confirmation Sensors

- Detection and confirmation of the wrong-way vehicle is made by Doppler radar or an infrared camera, depending upon the detection environment. If the travel lane area of detection is directly next to a lane of traffic that should be traveling in the same direction as the desired wrong way detection area of interest, the detection area is limited to only a specific area with proper selection and configuration of the detection sensor
- Upon detection of a wrong-way vehicle, the initial detection sensor sends a signal to the central controller at the message sign via a wired or wireless connection, initiating the “Wrong Way” message. The initial detection sensor can be up to 1000 feet in advance of the message sign. This distance is determined by the specific installation environment
- The confirmation sensor is generally located after the message sign, and if the vehicle continues past the sign a signal is transmitted to the central controller to send an alert to the designated recipient(s)

Alert Technology

- Alerts are sent to email or text address
- Alerts can be sent to as many recipients as desired
- System is password protected with three levels of access
- Fully hosted, turnkey web-based remote management service:
  - Internet-connected computer and browser provides anywhere access
  - No IT infrastructure or support necessary
  - No additional hardware or network appliances necessary
  - No software or middleware to install for remote management
  - Wireless cellular connection provided by ATS; no separate charges
  - Web-based user interface is always up to date and continually receives applicable enhancements
- System can be accessed via API to inform other systems

Compatible with these ATS Products

Engineered and manufactured in the United States of America

1. InstAlert 18 & InstAlert 24 Red and Amber LEDs
2. Signs can be trailer or permanently mounted

Message Sign

- Two ATS message signs are available to display the “Wrong Way” message.
  - InstAlert 18 (iA18): 18” x 28” full matrix
  - InstAlert 24: (iA24): 24” x 60” full matrix
- Red or Amber LEDs for the Wrong Way message
- Optional strobes available to increase visibility, catch drivers attention
- iA18: 1-2 line messages
  - 1 line: 10-1/4” H x 5.75” W characters, 4 per line
  - 2 lines: 7” H x 4” W characters, 6 per line
- iA24: 1-3 line messages
  - 1 line: 24” H x 12.5” W characters, 4 per line
  - 2 lines: 10-1/4” H x 5.75” W characters, 8 per line
  - 3 lines: 7” H x 4” W characters, 12 per line
  - 2 lines: (1) 7” char, 12/line, (1) 10 1/4” char, 8/line
- Up to 6 screens per message, completely customizable by user
- Full graphics capability, each LED individually controllable
- Variable display time, flash and reverse rates for each screen
- Meets MUTCD specifications
- Detection and Notification System can be used to control message signs from other manufacturers
- See the ATS InstAlert Specifications for more VMS sign specs

Power

- System can be run on AC or Solar power. Power is tailored to the requirements of the installed location. Input: 12VDC

System detects, confirms and remotely alerts when a vehicle is travelling the wrong way down an exit ramp or similar lane.

System is powered with individual power at each component or a central power system, either AC or solar. If a central system is used, communications are wired. If individual solar power is provided, communication is via radio.

Front Detection Camera or Radar
First detection of car entering ramp in the wrong direction. Monitored ramp can be directly next to ramp with vehicles traveling correctly in the "wrong" direction.

Power
Solar at the camera or Remote Solar/AC System.

Signal
Sent by radio to warning sign, or by wire through power conduit if remote powered.

Warning Sign
Warns driver they are traveling the wrong way. Red LED message with white strobes.

Power
Solar at the sign or Remote Solar/AC.

Signal
Received by radio to sign, or by wire through power conduit if remote powered.

Sensor Co-location
Rear Confirmation Radar and/or Front Camera can be co-located with sign in some configurations.

Rear Confirmation Radar
Confirms vehicle on ramp traveling in the wrong direction and triggers an alert so the authorities can respond.

Power
Solar at the camera or Remote Solar/AC.

Signal
Sent by radio to sign, or by wire through power conduit if remote powered.

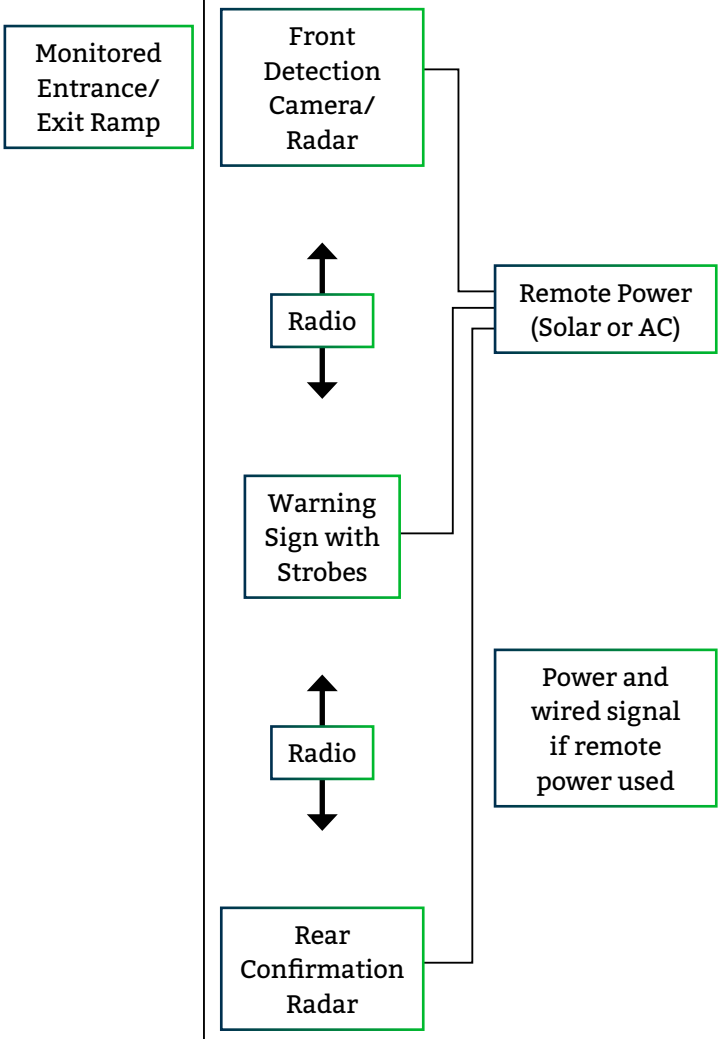

All Traffic Solutions 12950 Worldgate Drive, Suite 310, Herndon, VA 20170
Phone 866.366.6602 | sales@alltrafficsolutions.com | AllTrafficSolutions.com

©All Traffic Solutions
TraffiCloud leverages our patented technology (US Patents 8,417,442; 8,755,990; 9,070,287; 9,411,893) to deliver unique cloud-based management, features and functionality.